# TK50 THERM

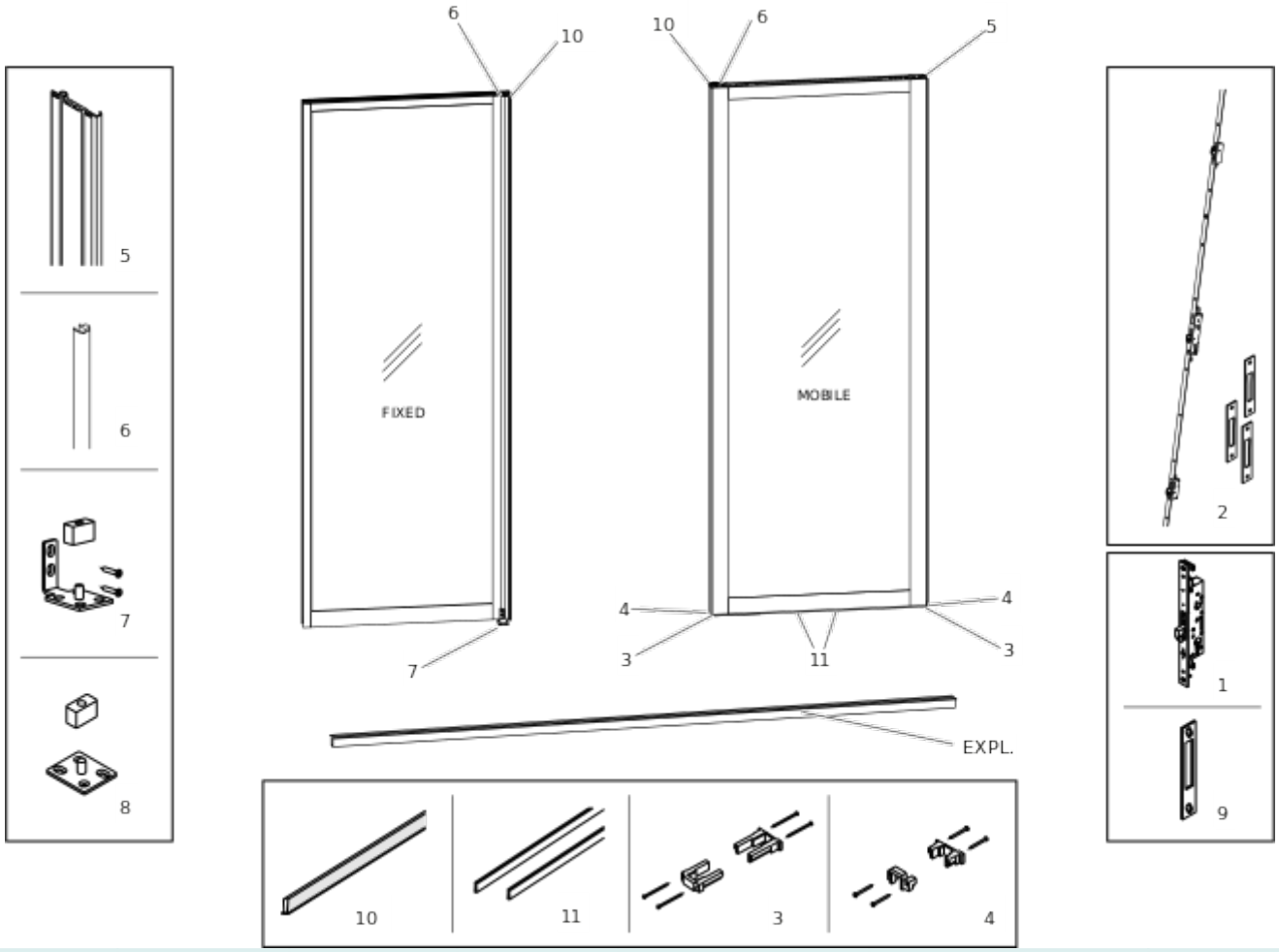


| Position | Code | EAN | Quantité | Code de remplacement | Description | Vendable |
|---|---|---|---|---|---|---|
| 1 | 63003644 | 8,06E+12 | 1 | | 1PT TK50 THERM HOOK LOCK ASSEMBLY | oui |
| 2 | 63003645 | 8,06E+12 | 1 | | TK50 THERM 3-POINT LOCK ASSEMBLY WITH 3 PLATES | oui |
| 3 | 63003646 | 8,06E+12 | 10 | | TK50 THERM LARGE UPRIGHT CAP ASSEMBLY | oui |
| 4 | 63003647 | 8,06E+12 | 10 | | TK50 THERM SMALL UPRIGHT CAP ASSEMBLY | oui |
| 5 | 63003648 | 8,06E+12 | 1 | | TK50THERM CENTRAL SEAL 40M | oui |
| 6 | 63003649 | 8,06E+12 | 1 | | TK50T. LABYRINTH SEAL 30 M | oui |

| Position | Code | EAN | Quantité | Code de remplacement | Description | Vendable |
|---|---|---|---|---|---|---|
| 7 | 63003650 | 8,06E+12 | 2 | | TK50 THERM ‘L’-SHAPED SKATE ASSEMBLY | oui |
| 8 | 63003651 | 8,06E+12 | 2 | | TK50 THERM INLINE SKATING SET | oui |
| 9 | 63003652 | 8,06E+12 | 5 | | 1PT TK50 THERM HOOK LOCK PLATES | oui |
| 10 | 105985 | 8,06E+12 | 1 | | BRUSH "POLY-BOND" mm4,8X7 PB048.0700-4PB | oui |
| 11 | 63003662 | | 8 | | BRUSH 2.7 x 2.7 x 13, L = 1500 mm | oui |
| 12 | EXPL. | | 1 | | SPARE PARTS FOR FLOOR GUIDES | oui |