CAISSON S700H

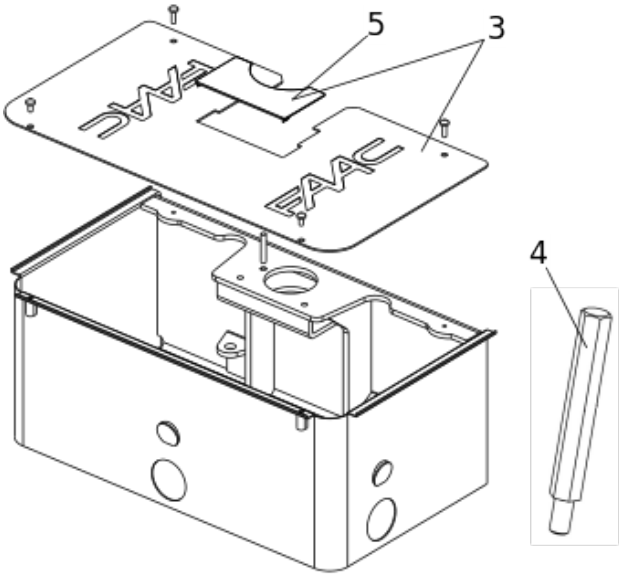

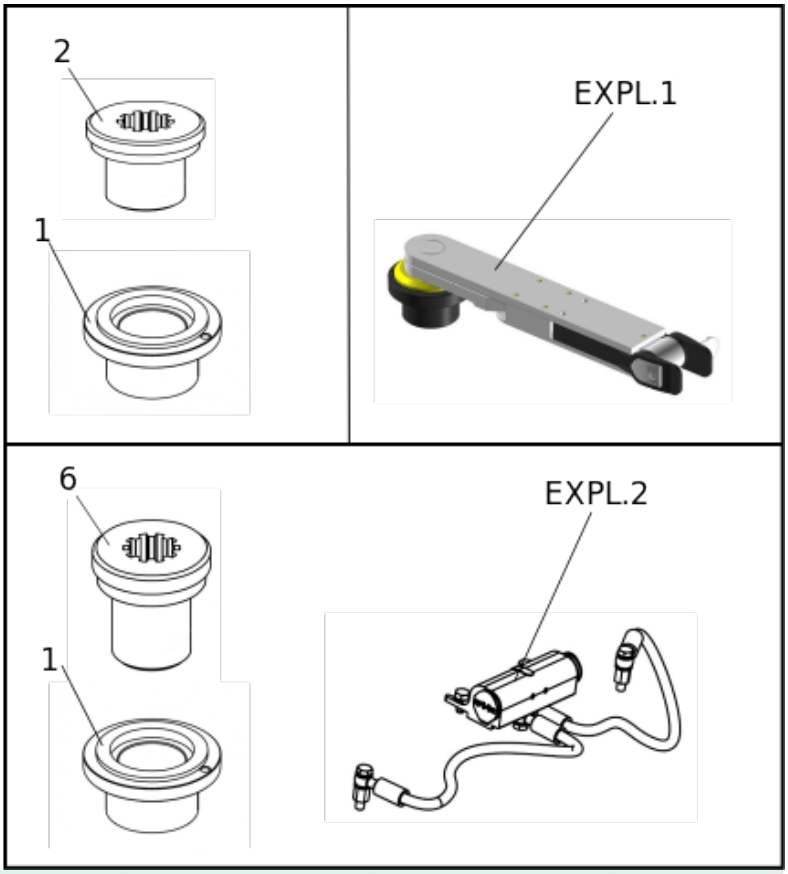

Position	Code	EAN	Quantité	Code de remplacement	Description	Vendable
1	63000015	8055195028669	1		S800 LOW BUSHING GROUP (SPLINED JOINT)	oui
2	63000045	8055195028744	1		S800H SPLINED JOINT GROUP	oui
3	63000075	8055195028782	1		S800H COVER FOR FIXING BOX	oui
4	63000065	8055195028775	1		S800H TIE ROD FIXING	oui
5	63002455	8055195033311	1		FAAC S800 plaque de couverture 1pc-	oui
6	63002445	8055195033304	1		High splined joint S800H	oui