FAAC LED 230V

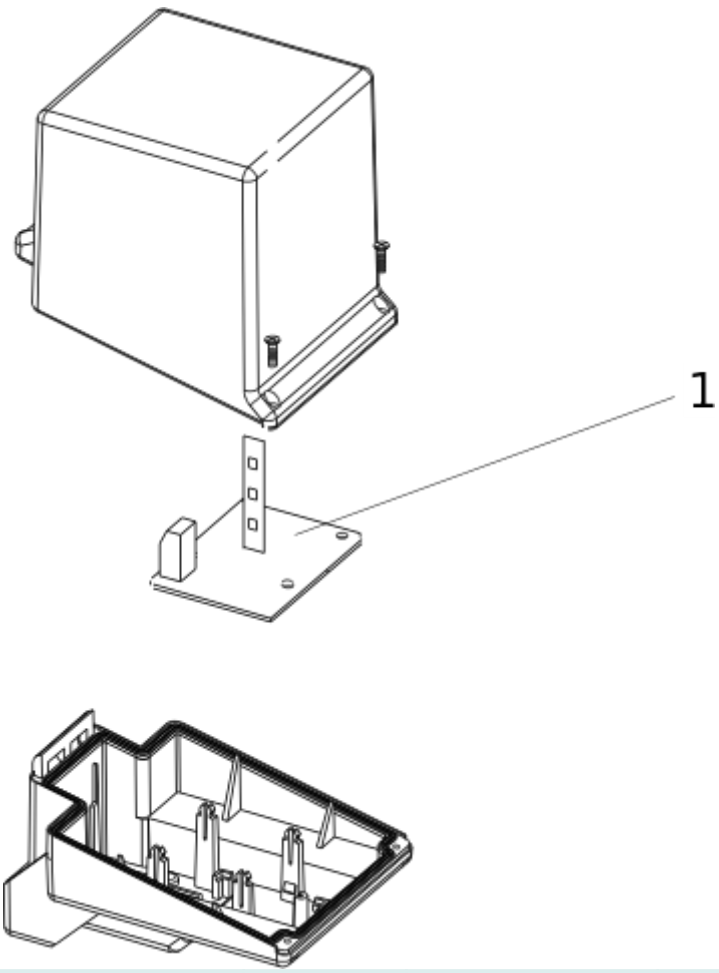

Position	Code	EAN	Quantité	Code de remplacement	Description	Vendable
001	63002745	8055195033489	1		LED 230V BOARD SPARE PART	oui